OSI2SHOMS95 Overcentre Valve with Shuttle OMS Mounting

FLUID POWER SYMBOL

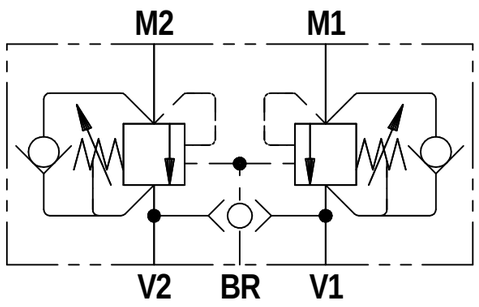

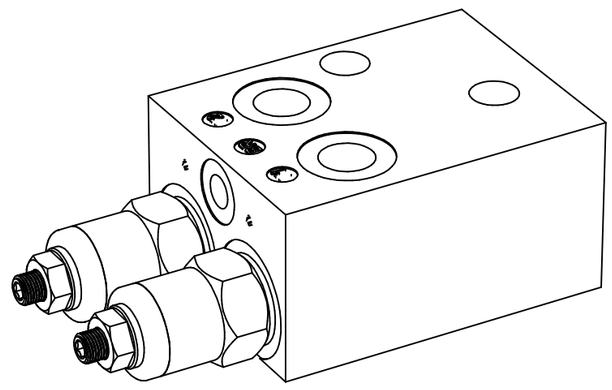

APPLICATION

Overcenter valves give static and dynamic control of loads by regulating the flow into and out of hydraulic actuators. The Motor Mounted bodies reduce the need for excessive piping and instead give a clean interface for the Overcentre Valve to be used in conjunction with your motor. The prime sized ports allow for directly connecting the valve bank to the Overcentre valve.

OPERATION

The check section allows free flow into the actuator then holds and locks the load against movement. The pilot assisted relief valve section will give controlled movement when pliot pressure is applied. For optimisation of load control and energy usage, a choice of pilot ratios are available.

FEATURES

The OM Motor interface provides stacking of the valve directly onto the Hydraulic Motor. Mating surfaces are ground and ports with O-rings are spot faced. The valve pressure setting is adjustable by means of an adjusting screw and locknut.

General Specifications

Description	direct acting overcentre valve
Construction	Screw-in Cartridge Construction for Cavity
Mounting	2 bolt holes for direct OMS motor flange
Installation Position	any
Ambient Temp.	-20°C to +50°C
Manifold Material	Aluminium
Weight	OSI2SHOMS95 : 2.31 kg

Hydraulic Specifications

Hydraulic Fluid	Mineral oils. Contact sales office for other fluids.
Max. Pressure	250 bar
Rated Flow	100 lpm
Max. Contamination Level	BS5540/4 Class 18/16/13 (25µ nominal)
Viscosity Range	5 to 500 cSt
Leakage Flow	Less than 0.3 ml/min (5 dpm)
Hydraulic Fluid Temp.	-20°C to +90°C (Standard Seals)
Mounting	Line
Peak Pressure	350 bar
Max. Flow	120 lpm

ORDERING CODE

OSI2SHOMS95 F 4W 20 N 4

BASIC CODE
OSI2SHOMS95 - Dual OCV with Shuttle

CONNECTION
F: Screw Adjustment

PORT SIZE:
4W: 1/2" BSP Ports
1/4" BSP Brake Port

PILOT RATIO
4: Pilot Ration 4:1

SEAL KIT
N: Nitrile

PRESSURE RANGE
20: 70 to 225 bar. Std setting 100 bar

DIMENSIONS

BASIC CODE: OSI2SHOMS95 F 4W 20 N 4

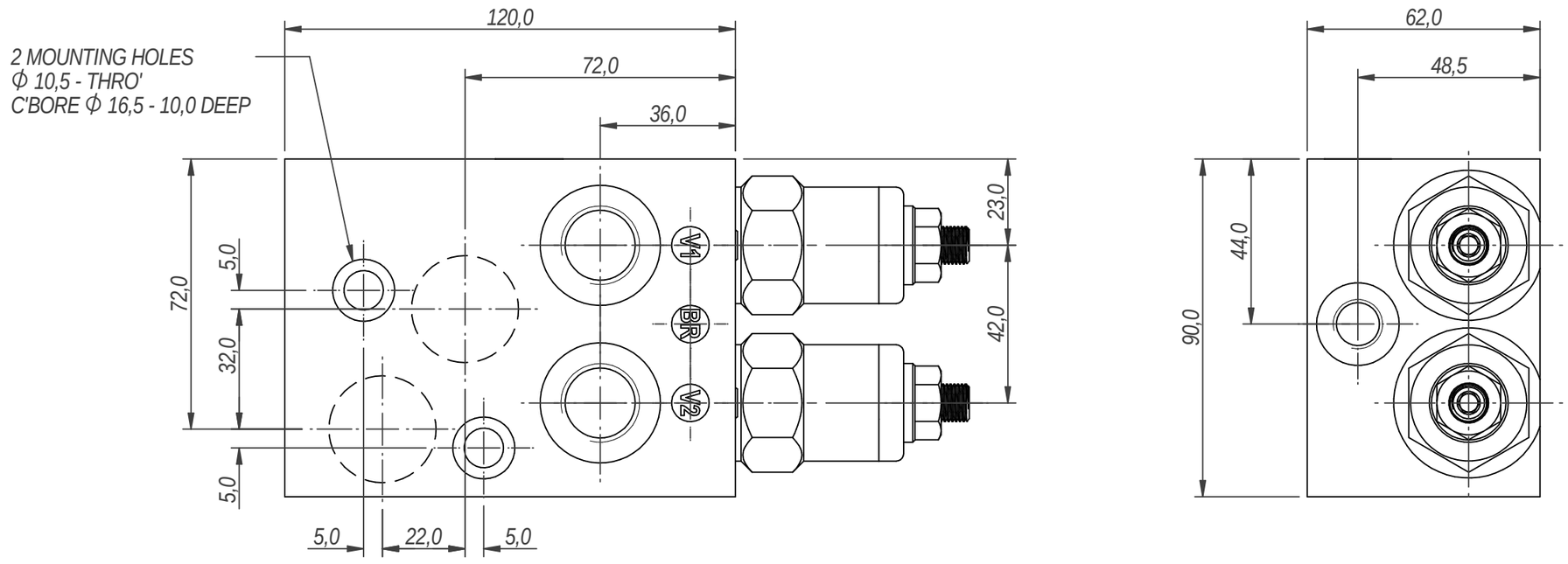

Specifications subject to change without notice.
Request certified drawings for critical measurements.

TUCSON HYDROCONTROLS PRIVATE LTD
Umbergaon - 396171, Gujarat
India