FDS

Flow Dividing System

FLUID POWER SYMBOL

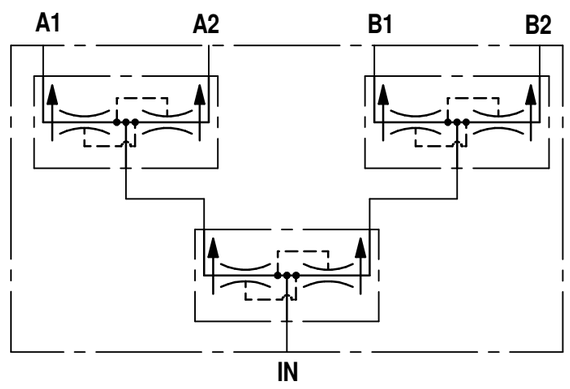

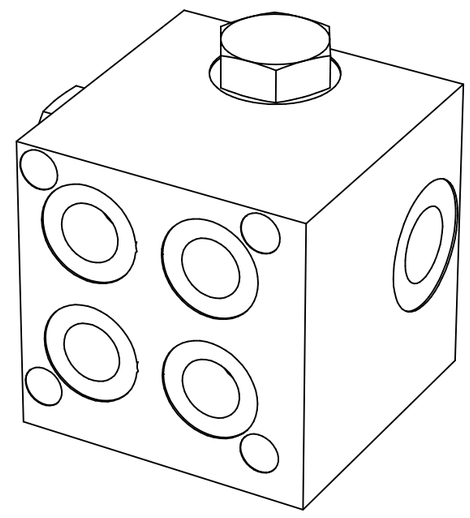

APPLICATION

A compact hydraulic integrated system for use in circuits where pump flow has to be divided equally into 4 parts to control hydraulic cylinders or hydraulic motors. This system provides a cost-effective alternative to using a gear type Flow Divider Valve which is often more expensive solution. Multiple Flow Divider Cartridges work in tandem to give a 4:1 dividing ratio.

OPERATION

The first Flow Divider divides the input flow into two output arms. These output arms are then internally connected to the inlet of the second pair of flow dividers. This pair's outlet arms are provided with external ports to connect to the actuators. Please note that the efficiencies of the flow divider are multiplied which means the resultant flow division is subject to more variation.

FEATURES

Compact and lightweight HIC with cartridge style valves. Easy for piping and servicing with fewer leakage points and low pressure drop. Conveniently located ports for ease of installation.

General Specifications

Description	hydraulic integrated circuit
Nominal Size	-
Mounting	M10 threaded bolts
Installation Position	any
Ambient Temp.	-20°C to +50°C
Manifold Material	Aluminium
Weight	FDS **** 4W3W N 1.40 kg

Hydraulic Specifications

Hydraulic Fluid	Mineral oils. Contact sales office for other fluids.
Max. Pressure	210 bar
Rated Flow	60 lpm
Max. Contamination Level	BS5540/4 Class 18/16/13 (25µ nominal)
Viscosity Range	5 to 500 cSt
Leakage Flow	Less than 35 ml/min
Hydraulic Fluid Temp.	-20°C to +90°C (Standard Seals)
Mounting	Line
Peak Pressure	240 bar
Max. Flow	65 lpm

ORDERING CODE

FDS 6040 4W3W N

BASIC CODE
FDS - Flow Divider System

SIZE AND TYPE
6030 - Inlet 60lpm, Outlet 15lpm
4020 - Inlet 40lpm, Outlet 10lpm
2010 - Inlet 20lpm, Outlet 5lpm
1005 - Inlet 10lpm, Outlet 2.5lpm

PORT SIZE
4W3W: 1/2" BSP Inlet
3/8" BSP Outlet

Seal Kit
N: Nitrile

CHARACTERISTICS. Figures Based on: Oil Temp = 40'C, Viscosity = 40 cSt

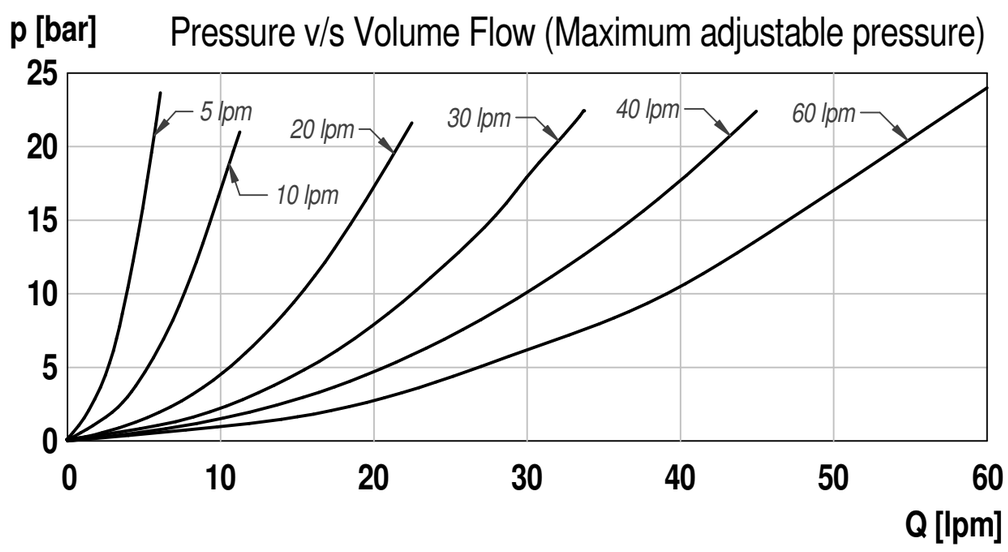

DIMENSIONS

BASIC CODE: FDS ** 4W 3W N**

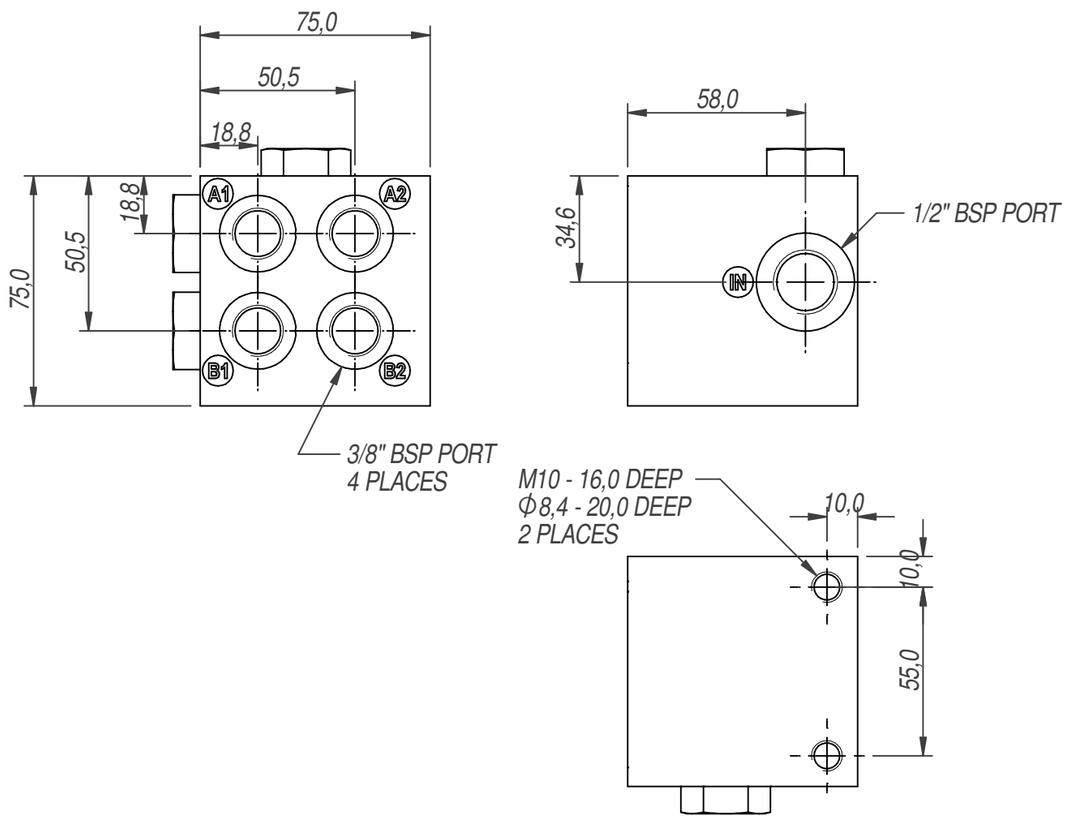

TUCSON HYDROCONTROLS PRIVATE LTD
Umbergaon - 396171, Gujarat
India