CAVITY TH880

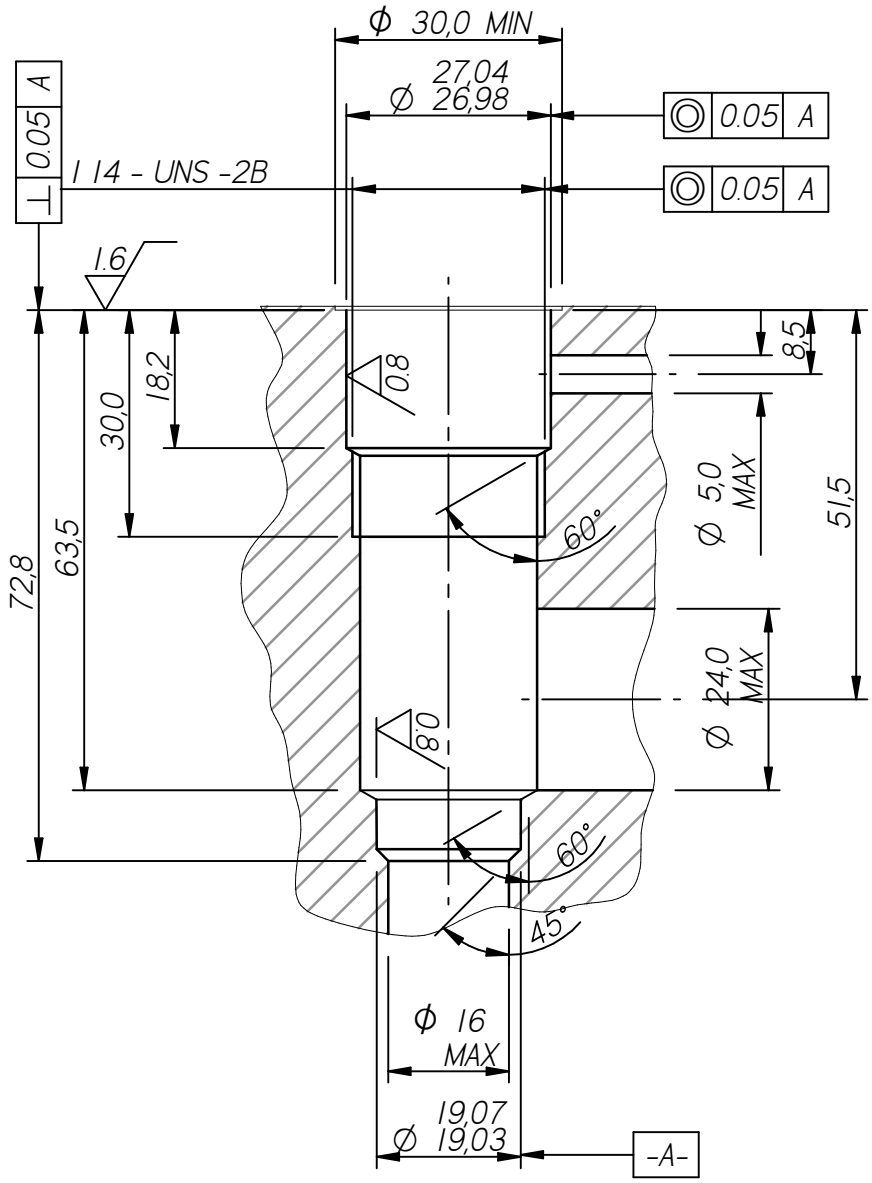

FORM TOOLS		CARTRIDGES	DATASHEET
Form Drill	FRA1302	PS 150	2-120
Form Reamer	FRA1303	PA 150	3-120
Thread Tap	1"-14 UNS		

Where measurements are critical request certified drawings. We reserve the right to change specifications without notice.

CIB 246/5, G.I.D.C. Indl. Estate
Umbergaon, Gujarat
sales@tucsonhydrocontrols.com
www.tucsonhydrocontrols.com